GENERAL NOTES

1. LOCATE VERIFY AND PROTECT ALL EXISTING UTILITY LINES BEFORE THE START OF WORK.
2. CONFIRM ROAD RIGHT OF WAY LOCATION PRIOR TO BEGINNING WORK. ALL WORK OF THIS CONTRACT WILL BE LOCATED WITHIN THE ROAD RIGHT OF WAY UNLESS OTHERWISE NOTED ON DRAWINGS.
3. COORDINATE TRAFFIC CONTROL WORK WITH V.D.O.T. TRAFFIC CONTROL WILL BE IN COMPLIANCE WITH M.T.C.D. PART 6 LATEST EDITION.
4. CONTRACTOR IS RESPONSIBLE FOR ALL FEDERAL, STATE AND LOCAL PERMITS AS NECESSARY TO COMPLETE THE WORK SHOWN ON THE DRAWINGS.
5. CONTRACTOR IS RESPONSIBLE FOR THE CONSTRUCTION SURVEY LAYOUT.
6. COORDINATE ALL SCHEDULING AND PROJECT WORK WITH V.D.O.T. AND PRINCE GEORGE COUNTY.

LAYOUT NOTES

1. A PROFESSIONAL LAND SURVEYOR LICENSED IN THE COMMONWEALTH OF VIRGINIA WILL ESTABLISH SURVEY CONTROL AND SITE LAYOUT.
2. PROVIDE WRITTEN NOTIFICATION OF ALL DISCREPANCIES BETWEEN CONDITIONS SHOWN ON THE DRAWINGS AND EXISTING CONDITIONS PRIOR TO BEGINNING WORK.
3. TAKE ALL DIMENSIONS FROM FACE OF CURB, FACE OF WALL, FACE OF BUILDING AND CENTERLINE UNLESS OTHERWISE NOTED.
4. ALL DIMENSIONS ARE PERPENDICULAR TO ANY REFERENCE LINE. WORK LINE FACE OF BUILDING FACE OF WALL OR CENTERLINE.
5. ALL ANGLES ARE 90 DEGREES AND ALL LAYOUT LINES ARE PARALLEL UNLESS OTHERWISE NOTED.
6. EDGES OF ALL CURVING WALKS, CURBS, WALLS AND LANDSCAPE EDGING WILL BE SMOOTH AND CONTINUOUS CURVES WITH NO ABRUPT ANGLES OR CHANGES OF DIRECTION. STAKE THE EDGE LAYOUT OF THESE ITEMS AND REQUEST OWNER'S APPROVAL PRIOR TO INSTALLATION.

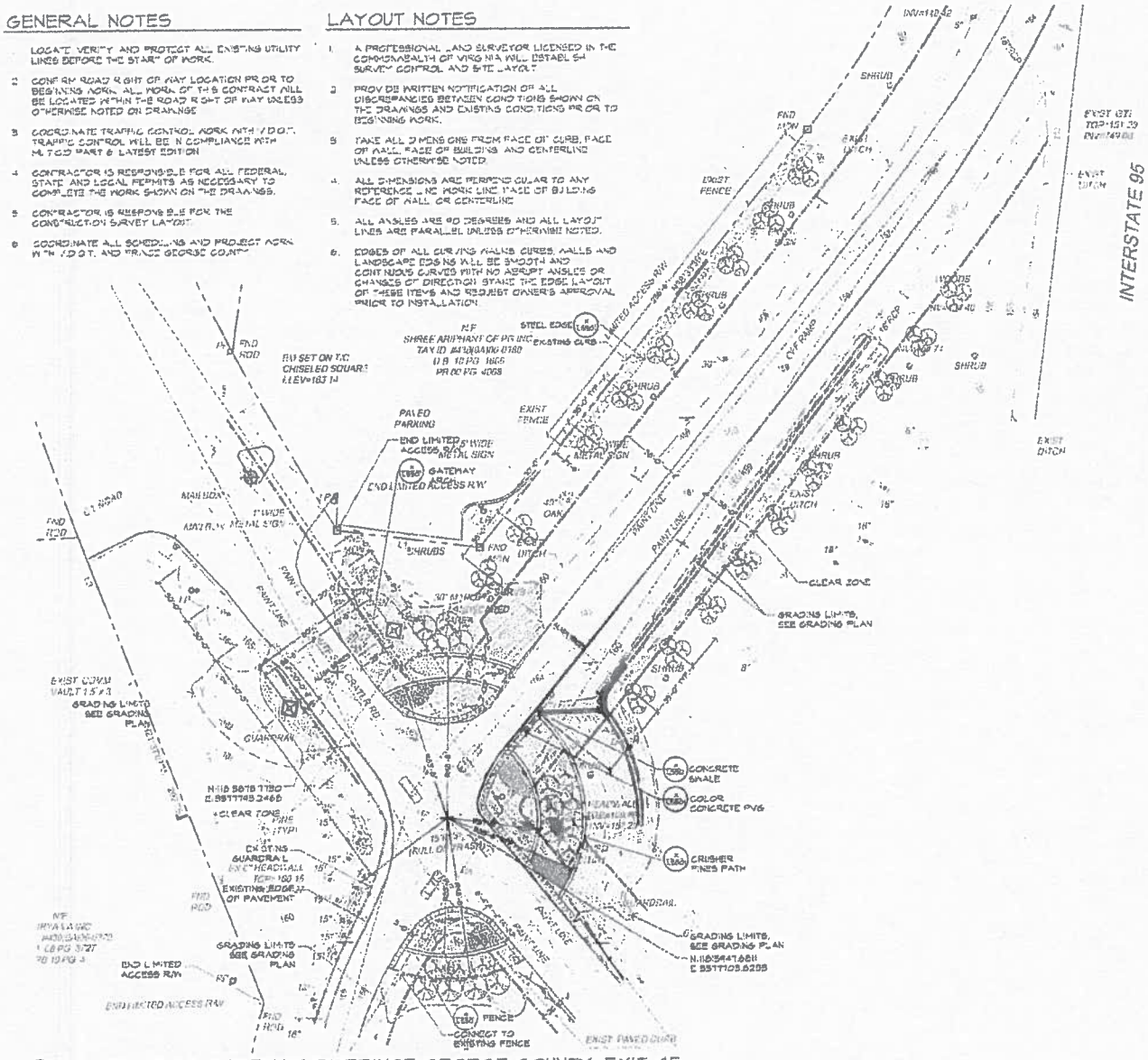

1 LAYOUT PLAN-GATEWAY DI-PRINCE GEORGE COUNTY, EXIT 45
SCALE: 1"=30'-0"

LEGEND

- R.O.W. OR PROPERTY LINES
- V.D.O.T. CLEAR ZONE
- GRADING LIMIT
- SIGHT LINES
- EXISTING CONTOUR 1 FT. INTERVAL
- FLOW LINE
- EXISTING TREES TO REMAIN
- EXISTING PROPOSED FENCE
- PROPOSED TREE
- SHRUBS ORNAMENTAL GRASSES PERENNIALS & GROUND COVERS
- SOD - FESCUE / BLUEGRASS
- NATIVE GRASS & WILDFLOWER SEED
- CONCRETE EDGE
- CONCRETE SWALE
- CULVERT EXISTING PROPOSED
- COLOR CONCRETE
- STEEL EDGE
- CRUSHER FINES PATH
- GATEWAY SPINE

landscape architecture
urban design
bridge aesthetics

2020 B Pearl Street
Boulder, CO 80302
T 303.938.9900
clearwaydesignlec.com

CAMERON FOUNDATION
236 S. Sycamore Street
Petersburg, VA 23803
T 804.732.8000

GATEWAY D1, I-95 EXIT 45
COUNTY OF PRINCE GEORGE, VIRGINIA
6602 COURTS DRIVE
PRINCE GEORGE COUNTY, VA. 23875

REV	COMMENT	DATE

PRELIMINARY NOT FOR CONSTRUCTION

DATE: 3/6/2013
SCALE: AS SHOWN
JOB NO: 14-04 I VirginiaGateways
DRAWN BY: BM
CHECKED BY: DL

DRAWING TITLE:
LAYOUT AND MATERIALS PLAN

SHEET NO.:
LS101

© clearwaydesign inc.

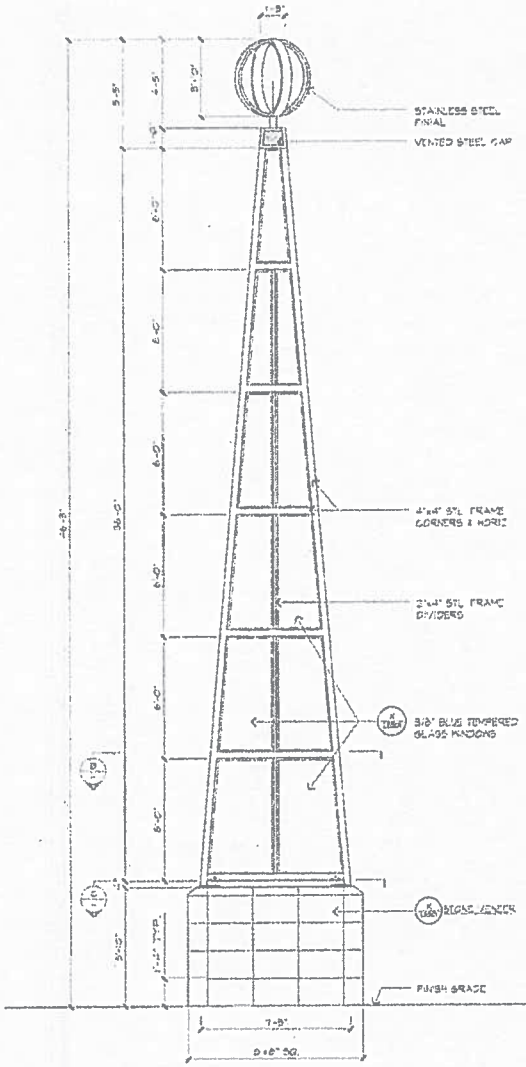

1 FRONT ELEVATION-SPIRE
Scale 1/2"=1'-0"

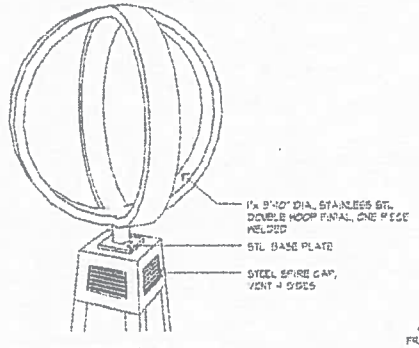

A ISO-FINIAL & CAP
Scale NTS

NOTE: SPIRE FRAME WILL BE ONE PIECE WELDED STAINLESS STEEL

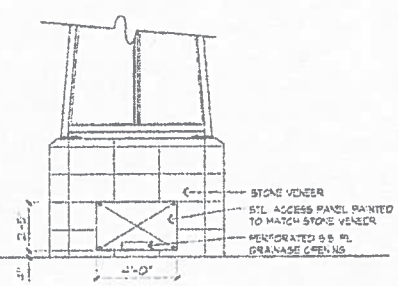

2 REAR ELEVATION- SPIRE BASE
Scale 1/2"=1'-0"

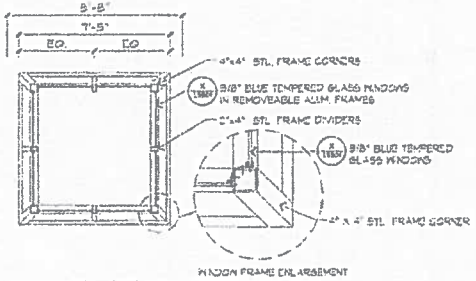

B SECTION - "B" MONUMENT COLUMN
Scale 1/2"=1'-0"

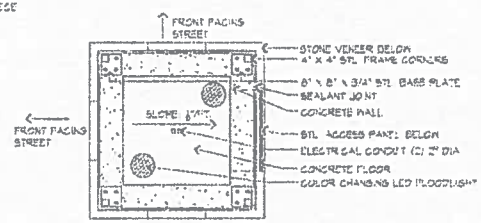

C SECTION - "A" MONUMENT FOUNDATION
Scale 1/2"=1'-0"

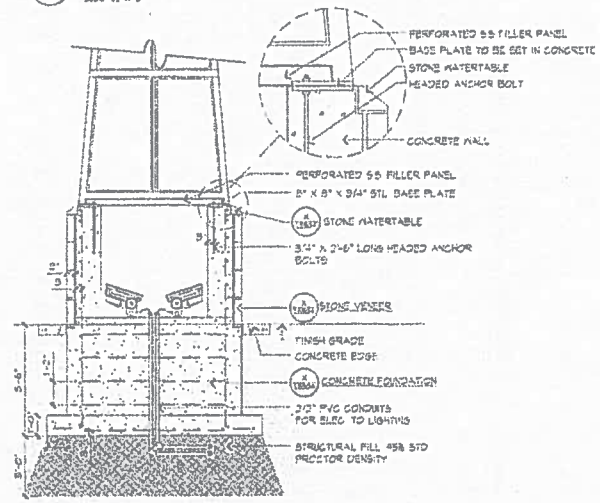

3 SECTION-SPIRE BASE
Scale 1/2"=1'-0"

landscape architecture
urban design
bridge aesthetics
2070 B Pearl Street
Boulder, CO 80302
T 303.938.9900
cleanadesigninc.com

THE CAMERON FOUNDATION
128 S. Sycamore Street
Petersburg, VA 23803
T 804.732.8909

GATEWAY D1, I-95 EXIT 45
COUNTY OF PRINCE GEORGE, VIRGINIA
6602 COURTS DRIVE
PRINCE GEORGE COUNTY, VA. 23875

REV	COMMENT	DATE

PRELIMINARY NOT FOR CONSTRUCTION

DATE 3/10/2015
SCALE 3/16"=1'-0"
JOB NO 14.04.1 VirginiaGateways
DRAWN BY BM
CHECKED BY

DRAWING TITLE
GATEWAY SPIRE DETAILS

SHEET NO.
LS501

© cleanadesign inc.

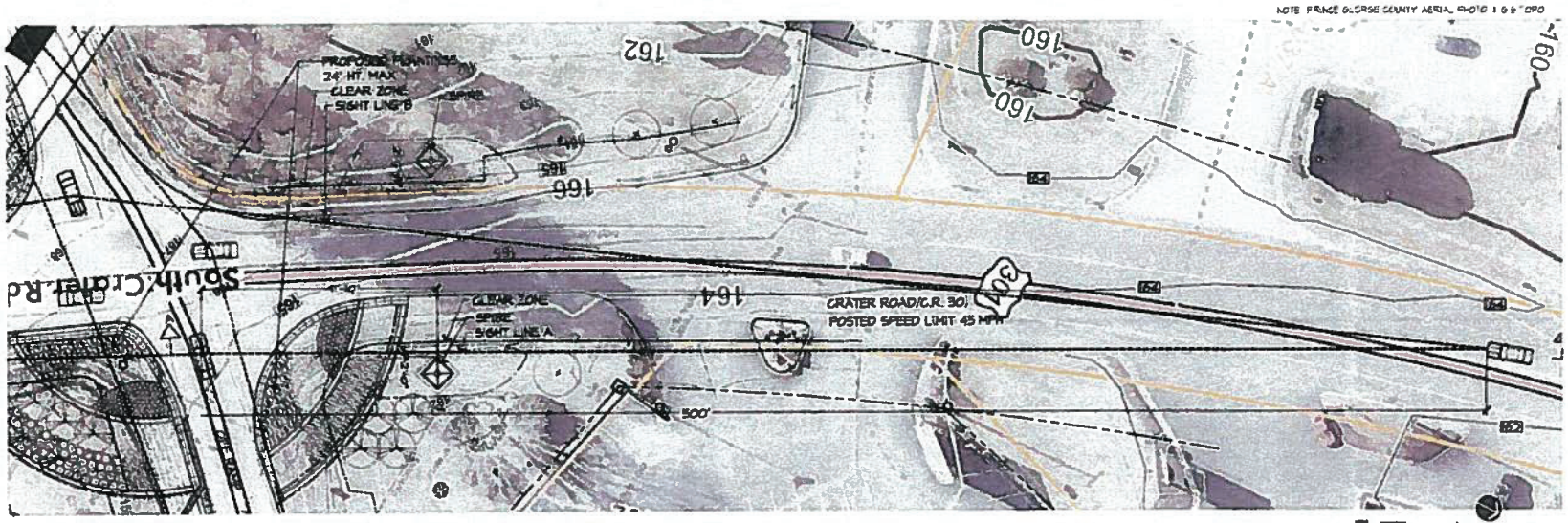

1 SIGHT LINE PLAN, GATEWAY DI-PRINCE GEORGE COUNTY, EXIT 45
SCALE 1"=20'-0"

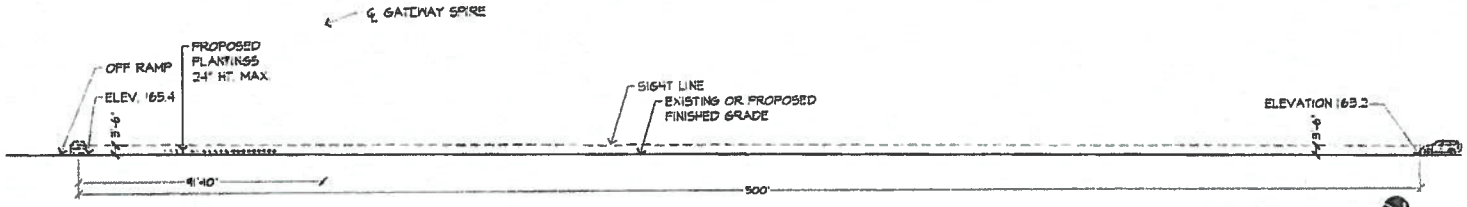

2 SIGHT LINE SECTION A-A, GATEWAY DI-PRINCE GEORGE COUNTY, EXIT 45
SCALE 1"=20'-0"

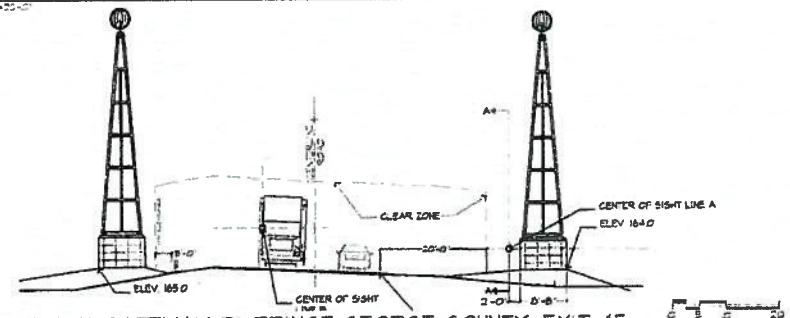

3 ELEVATION-GATEWAY DI-PRINCE GEORGE COUNTY, EXIT 45
SCALE 1"=10'-0"

Landscape architecture
urban design
bridge architecture
2020 B Pearl Street
Boulder CO 80302
T 303.579.9500
chenoweth-design.com

CAMERON FOUNDATION
220 S Sycamore Street
Petersburg VA 23803
T 804 732 8406

GATEWAY DI, I-95 EXIT 45
PRINCE GEORGE COUNTY, VIRGINIA
6602 COURTS DRIVE
PRINCE GEORGE COUNTY, VA. 23875

REV	COMMENT	DATE

PRELIMINARY NOT FOR CONSTRUCTION

DATE 05/11/2015
SCALE
JOB NO 14-04 I VirginiaGateways
DRAWN BY BM
CHECKED BY DL

DRAWING TITLE
SIGHT LINE PLAN AND SECTIONS

SHEET NO
SL 101

© chenoweth-design inc.